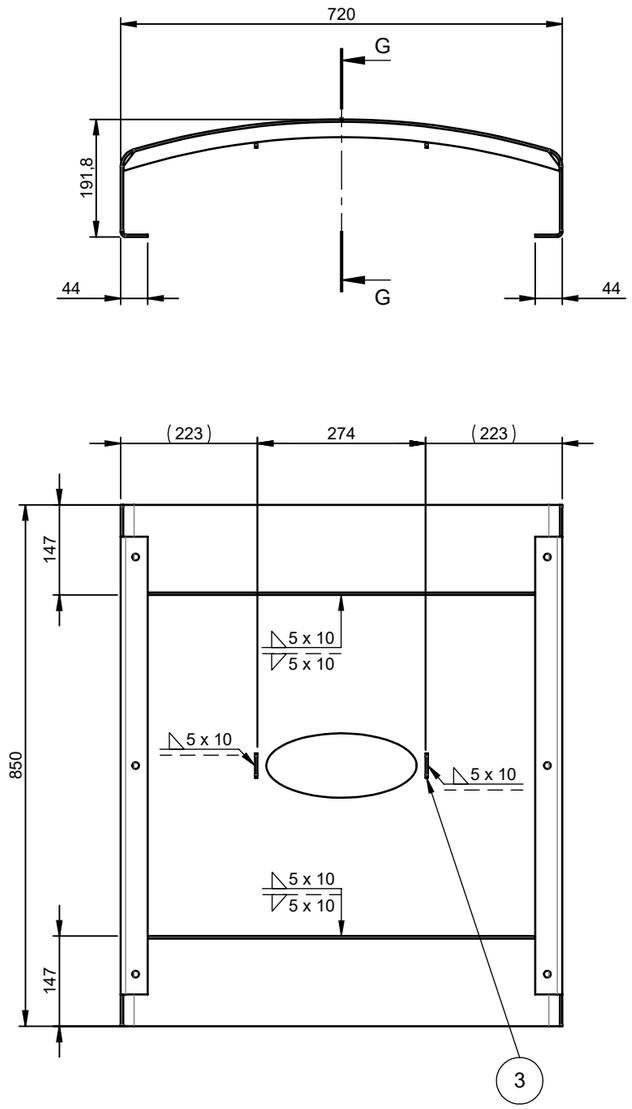

SECTION G-G

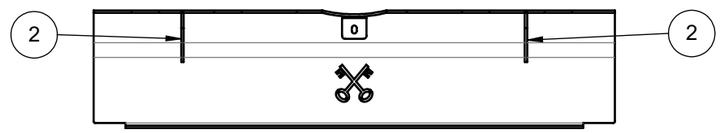

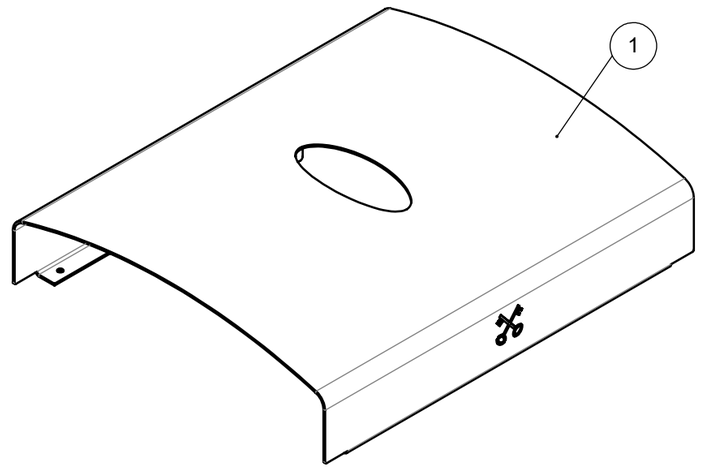

Material	Coating - 1e layer	Coating - 2e layer	Coating - 3e layer
S235JR	Primer, ALZ90F-K25 INTERPON PZ 790	Polyester powder, according to Qualicoat	Anti graffitti (IGP Durathan 8909)

Pos. no.	Qty.	Art.no.	Item name	Material	Remark	Dwg no.	Rev.
3	2	-	Circ Bin 140-240L - Ashtray attachment	(refer to order)	-	14.04	00
02 2	2	-	Circ Bin 140-240L - Cover reinforcement 240L	(refer to order)	-	24.02	02
02 1	1	-	Circ Bin 140-240L - Cover ashtray 240L	(refer to order)	-	24.03	02

Material: (refer to order)

Finishing: -

Coating: -

Rev.	Description	Date	Name
02	Updated dimentions in drawing 24.02 and drawing 24.03	11-4-2024	LSP

VelopA
www.velopa.com

concept: 18-04-2018	by: FWI	drawn : FS Withagen	
definite : -	by: -	date : 16-7-2018	
expired : -	by: -	project: P19-403	
specific norm: -		units: mm	scale: 1:10

Circ Bin 140-240L - Cover weldment ashtray 240L

Gen. tolerances according to NEN 2768-1; (for lineair measurements in mm) unless stated otherwise:

0,5 - 6	±0,3	120 - 400	±1,2
6 - 30	±0,5	400 - 1000	±2
30 - 120	±0,8	1000 - 2000	±3
		2000 - 4000	±4

(for shortest side of angular measurements in mm) unless stated otherwise:

0 - 10 ±1,3°	50 - 120 ±0,3°	>400 ±0,1°
10 - 50 ±1,0°	120 - 400 ±0,15°	

weight: 18.14kg

product no.	dwg.no.	rev
S020-310-	24.10	-02

art.no.: -

A3

P:\---PO\ALGEMEEN ---\PO-Projecten\AA- Inactieve projecten\P19-403 Circ Bin 140-240L (Leiden)\M4 - Uitvoeringsfase\1. Technische Tekeningen\24.10-02 Circ Bin 140-240L - Cover weldment ashtray 240L

© Copyright VelopA B.V.: All rights reserved, Art. 31 and seq. of the Copyright Act.
This document remains property of VelopA B.V. and may not be revealed to third parties, duplicated or used for any application, without explicit permission of the owner.

© Copyright VelopA B.V.: Alle rechten voorbehouden, Art. 31 e.v. van de auteurswet.
Dit document blijft eigendom van VelopA B.V. en mag niet aan derden ter inzage worden gegeven, gedupliceerd of voor uitvoering worden gebruikt, zonder uitdrukkelijke toestemming van de eigenaar.